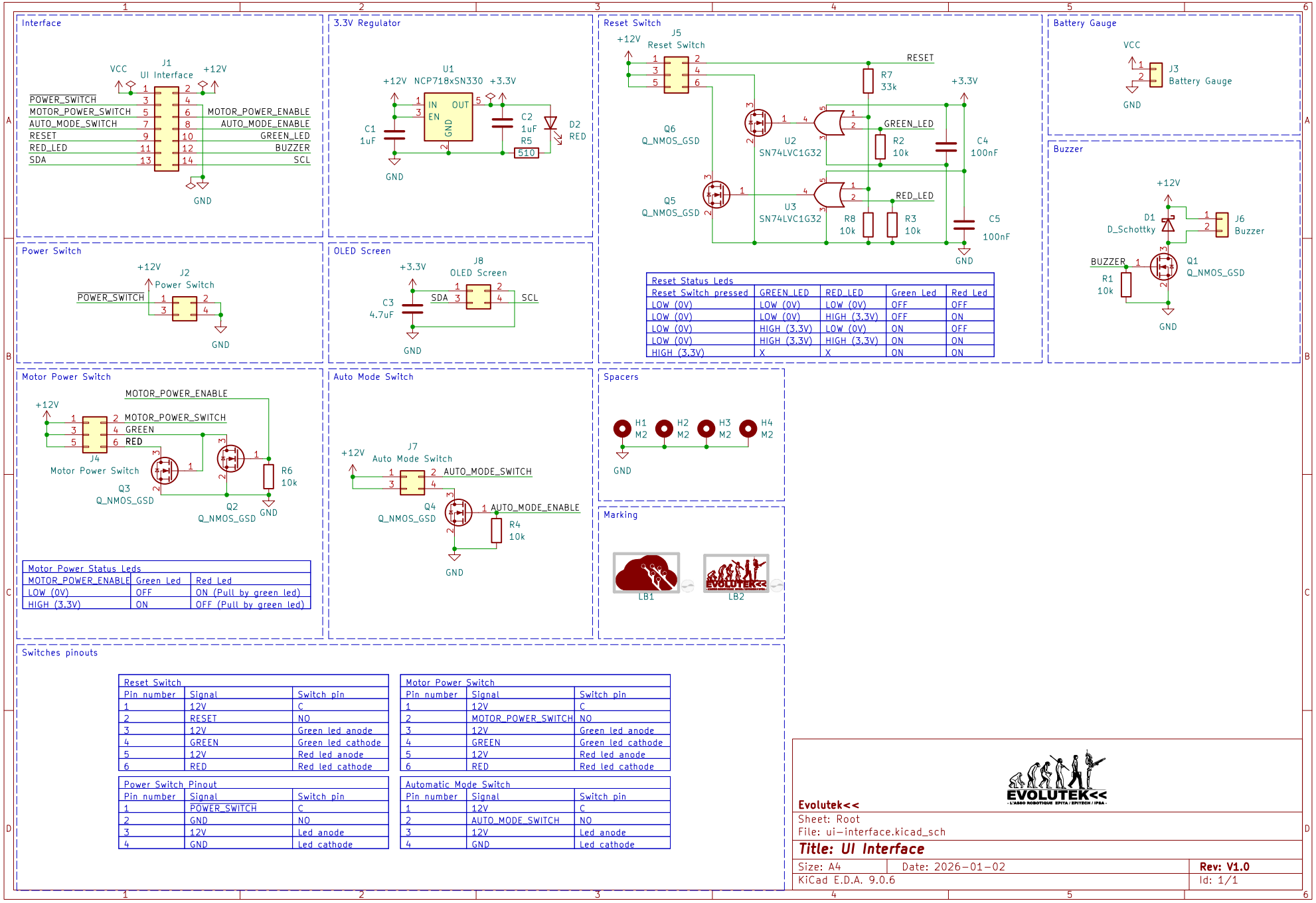

Reset Status Leds				
Reset Switch pressed	GREEN_LED	RED_LED	Green Led	Red Led
LOW (0V)	LOW (0V)	LOW (0V)	OFF	OFF
LOW (0V)	LOW (0V)	HIGH (3.3V)	OFF	ON
LOW (0V)	HIGH (3.3V)	LOW (0V)	ON	OFF
LOW (0V)	HIGH (3.3V)	HIGH (3.3V)	ON	ON
HIGH (3.3V)	X	X	ON	ON

Motor Power Status Leds		
MOTOR_POWER_ENABLE	Green Led	Red Led
LOW (0V)	OFF	ON (Pull by green led)
HIGH (3.3V)	ON	OFF (Pull by green led)

Reset Switch		
Pin number	Signal	Switch pin
1	12V	C
2	RESET	NO
3	12V	Green led anode
4	GREEN	Green led cathode
5	12V	Red led anode
6	RED	Red led cathode

Motor Power Switch		
Pin number	Signal	Switch pin
1	12V	C
2	MOTOR_POWER_SWITCH	NO
3	12V	Green led anode
4	GREEN	Green led cathode
5	12V	Red led anode
6	RED	Red led cathode

Power Switch Pinout		
Pin number	Signal	Switch pin
1	POWER_SWITCH	C
2	GND	NO
3	12V	Led anode
4	GND	Led cathode

Automatic Mode Switch		
Pin number	Signal	Switch pin
1	12V	C
2	AUTO_MODE_SWITCH	NO
3	12V	Led anode
4	GND	Led cathode